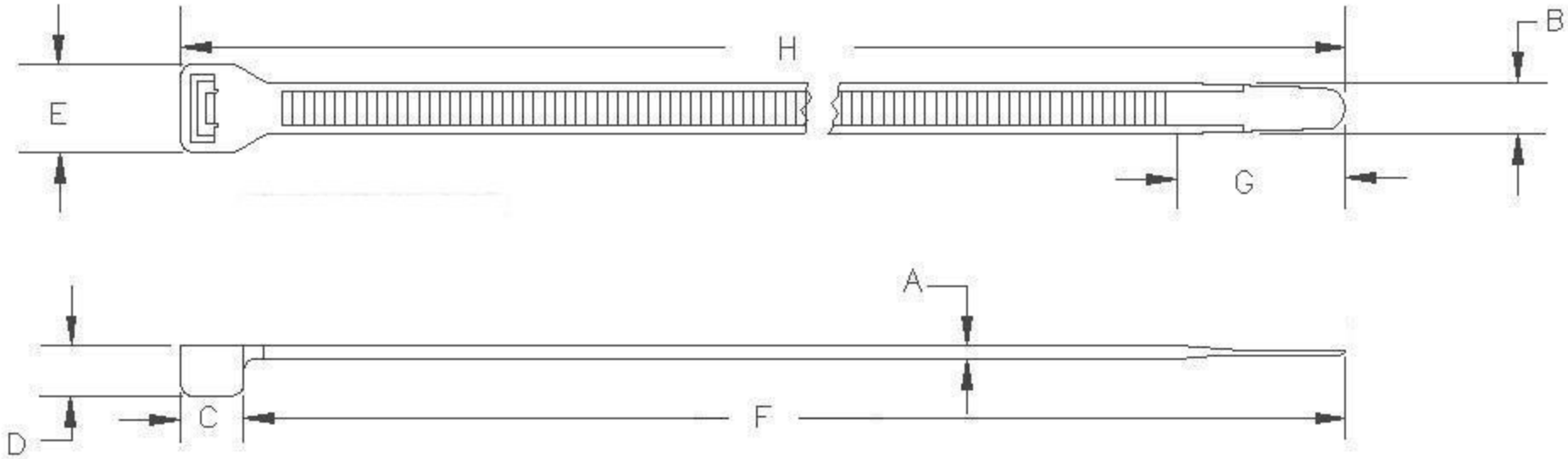

inch (mm)

* = lbs. (N)

MODEL NO.	OVERALL LENGTH H	BUNDLE DIA.	TENSILE STRENGTH *	MILITARY STD. NO.	A ±.003	B ±.003	C	D	E	F	G
RTH-800	8.00 (203)	2.00 (50.8)	120 (533)		.081 (2.06)	.310 (7.8)	.37 (9.4)	.295 (7.4)	.515 (13.1)	7.63 (194)	1.00 (25.4)
RTH-1400	14.75 (375)	4.00 (101.6)	120 (533)	AS33671-3	.081 (2.06)	.310 (7.8)	.37 (9.4)	.295 (7.4)	.515 (13.1)	14.38 (365)	1.00 (25.4)
RTH-1700	17.75 (451)	5.00 (127)	120 (533)		.081 (2.06)	.310 (7.8)	.37 (9.4)	.295 (7.4)	.515 (13.1)	17.38 (441)	1.00 (25.4)
RTH-2100	21.75 (552)	6.00 (152.4)	120 (533)		.081 (2.06)	.310 (7.8)	.37 (9.4)	.295 (7.4)	.515 (13.1)	21.38 (543)	1.00 (25.4)
1 RTH-2400	24.62 (625)	7.00 (177.8)	120 (533)		.081 (2.06)	.310 (7.8)	.37 (9.4)	.295 (7.4)	.515 (13.1)	24.25 (616)	1.00 (25.4)
RTH-2800	28.50 (724)	8.00 (203.4)	120 (533)	AS33671-6	.081 (2.06)	.310 (7.8)	.37 (9.4)	.295 (7.4)	.515 (13.1)	28.13 (714)	1.00 (25.4)

CUSTOMER DRAWING FILE RT2.DWG

REV	DATE	BY	CHK	DESCRIPTION	ECN - R	CUST	SUP
2	06-16-08	SB		DRAWING NO. WAS 10001-02 ADDED POLYPROPYLENE			
1	10-02-98	WJB		ADDED RTH-2400			
R	05-8-97	WJB		RELEASED		WJB	

ALL-STATES

RTH-SERIES
CABLE TIES

UNLESS OTHERWISE SPECIFIED, DIMENSIONAL TOLERANCES ARE:
(X) +/= (XXX) =/-
(XX) +/- ANGLES +/-

UNLESS OTHERWISE SPECIFIED ALL DIMENSIONS ARE GIVEN IN INCHES AND THIRD ANGLE PROJECTION.

DRAWN BY WJB
DATE 05-8-97
CHK'D.

MATERIAL
NATURAL
NYLON 6/6
POLYPROPYLENE

SCALE NONE
DRAWING NO. 2
10002-C
DWG. A
SIZE